ResearchGate

See discussions, stats, and author profiles for this publication at: https://www.researchgate.net/publication/271198907

Mathematical modeling of bldc motor with closed loop speed control using pid controller under various loading conditions

Article · October 2012

CITATIONS
55

READS
26,905

3 authors, including:

Sai Babu Ch
Jawaharlal Nehru Technological University, Kakinada
183 PUBLICATIONS **1,283** CITATIONS

SEE PROFILE

Purna Chandra Rao A.
8 PUBLICATIONS **105** CITATIONS

SEE PROFILE

All content following this page was uploaded by Sai Babu Ch on 22 January 2015.

The user has requested enhancement of the downloaded file.

VOL. 7, NO. 10, OCTOBER 2012 ISSN 1819-6608
ARPN Journal of Engineering and Applied Sciences
©2006-2012 Asian Research Publishing Network (ARPN). All rights reserved.
www.arpnjournals.com

MATHEMATICAL MODELING OF BLDC MOTOR WITH CLOSED LOOP SPEED CONTROL USING PID CONTROLLER UNDER VARIOUS LOADING CONDITIONS

A. Purna Chandra Rao[1], Y. P. Obulesh[2] and Ch. Sai Babu[3]
[1]EEE Department, PVPSIT, Vijayawada, Andhra Pradesh, India
[2]EEE Department, LBRCE, Maylavaram, India
[3]EEE Department, JNTUK, Kakinada, Andhra Pradesh, India
E-Mail: alapati.purna@yahoo.com

ABSTRACT

In the recent past, variable speed driving systems have sprouted in various small scale and large scale applications like automobile industries, domestic appliances etc. The usage of green and eco friendly electronics are greatly developed to save the energy consumption of various devices. This lead to the development in Brushless DC motor (BLDCM). The usage of BLDCM enhances various performance factors ranging from higher efficiency, higher torque in low-speed range, high power density, low maintenance and less noise than other motors. The BLDCM can act as an alternative for traditional motors like induction and switched reluctance motors. In this paper we present a mathematical model of BLDC motor and show the values of various technical parameters using MATLAB/SIMULINK. In this paper the simulation is carried out for 120 degree mode of operation. The test results show the performance of BLDCM which are highly acceptable. Finally a PID controller is applied for closed loop speed control under various loading conditions.

Index terms: BLDC motor, PID control, unipolar starting drive, 120 degree mode, bipolar starting drive.

1. INTRODUCTION

Using of Permanent Magnet in electrical machines have so many benefits and advantages then electromagnetic excitation machines these are zero excitation losses result in high efficiency, simple construction, low cost less maintenance and high torque or high output power per unit volume. In early 19th century permanent magnet excitation system was used for first time in electrical machines. The performance of this machine was very poor due to poor quality of hard magnetic material make this less usable. After the invention of alnico invigorated the use of permanent magnet excitation system increases. Rare earth permanent magnets improve the power density and dynamic performance of the machine. Induction motors are most popular machine in the 20th century due to its simple construction, less price, reasonable reliability and low maintenance. Due to small air gap, lower efficiency and low power factor than synchronous machine make synchronous machine prevalent in industrial applications. Due to high power to weight ratio, high torque, good dynamic control for variable speed applications, absence of brushes and commutator make Brushless dc (BLDC) motor [1], best choice for high performance applications. Due to the absence of brushes and commutator there is no problem of mechanical wear of the moving parts [2], [3]. As well, better heat dissipation property and ability to operate at high speeds [4-5] make them superior to the conventional dc machine.

However, the BLDC motor constitutes a more difficult problem than its brushed counterpart in terms of modeling and control system design due to its multi-input nature and coupled nonlinear dynamics. Due to the simplicity in their control, Permanent-magnet brushless dc motors are more accepted used in high-performance applications. In many of these applications, the production of ripple-free torque is of primary concern. There are three main sources of torque production in BLDCMs [6-11]: cogging torque, reluctance torque, and mutual torque. Cogging torque is created by the stator slots interacting with the rotor magnetic field and is independent of stator current excitation. Reluctance torque is caused by the variation in phase inductance with respect to position. Mutual torque is created by the mutual coupling between the stator winding current and rotor magnetic field. In general, surface-mounted magnets are used in many high-performance BLDCM's. Because the permeability of the magnet material is nearly equal to that of air, the effective air gap is enlarged by the magnet. This fact ensures minimum armature effect on the rotor field from the stator currents. If a BLDCM is designed with low saliency and either the stator slots or rotor magnets are skewed by one slot pitch, the effects of the first two torque components can be greatly reduced. Therefore, if the waveforms of the phase back EMF and phase current are perfectly matched, torque ripple is minimized and the mutual torque component is maximized. In this paper finally closed loop speed control is done by using PID controller under various loading conditions.

2. PRINCIPLE OF OPERATION

In conventional BLDC motor during bipolar operation, at any time across DC bus, two phases come in series. Only half of the DC bus voltage is applied to each phase, resulting in addition of torque constant on both phases there by achieving high starting torque. But speed will be limited. To get higher speed, full DC bus voltage is to be applied to each phase. This can be achieved in unipolar operation, where each phase conducts only in one direction which in turn reduces the starting torque. Thus in

©2006-2012 Asian Research Publishing Network (ARPN). All rights reserved.

order to get high torque, motor should operate in bipolar mode and to get high speed motor should operate in unipolar mode. Shifting of modes between unipolar and bipolar operation is achieved based on speed requirement. The proposed inverter consists of 4 legs. The 3 phases of BLDC motor is connected to first 3 legs and neutral point is connected to the fourth leg as shown in Figure-1. In bipolar operation first 3 legs are active and the 4th leg is inactive. Here we have considered only bipolar operation.

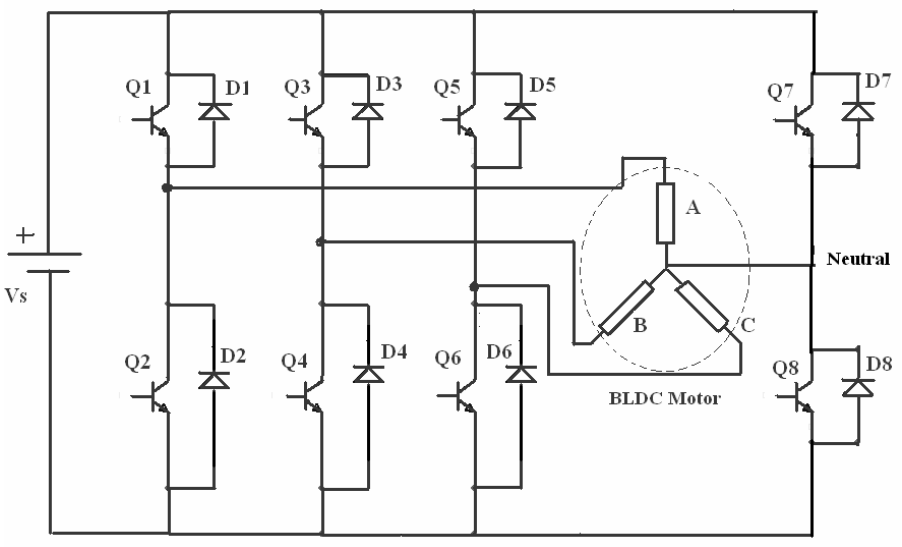

Figure-1. Proposed inverter circuit.

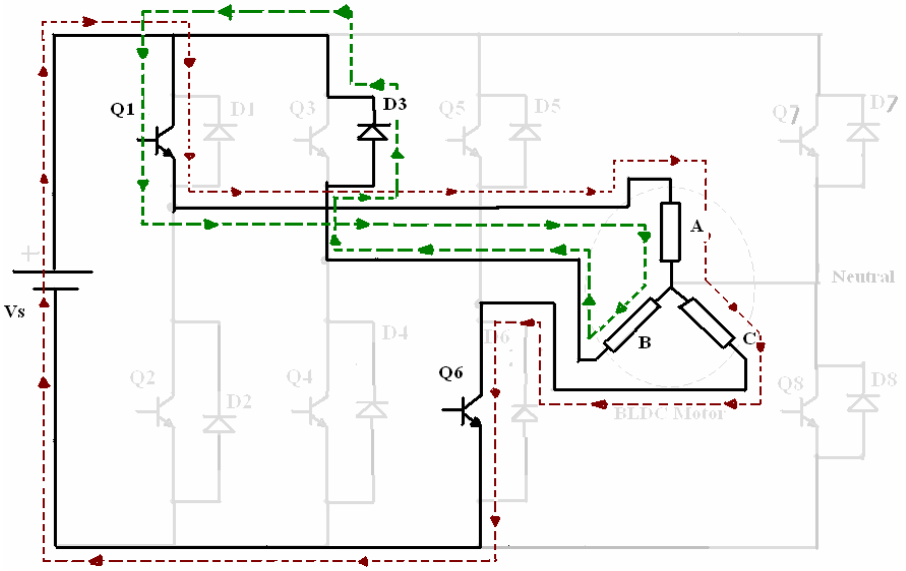

Figure-2. Free-wheeling of negative conducting B phase.

By switching on Q1 and Q4, phase A conducts in positive direction and phase B conducts in negative direction. By switching off Q4 and switching on Q6, a free-wheeling path is established through phase B, diode D3, switch Q1 and Phase A as shown in Figure-2.

By switching off Q1 and switching on Q3 and Q6, the free-wheeling energy in positive conducting phase A flows through resistor R_s, D2, phase A, phase C, and Q6, as shown in Figure-3.

ARPN Journal of Engineering and Applied Sciences
©2006-2012 Asian Research Publishing Network (ARPN). All rights reserved.
www.arpnjournals.com

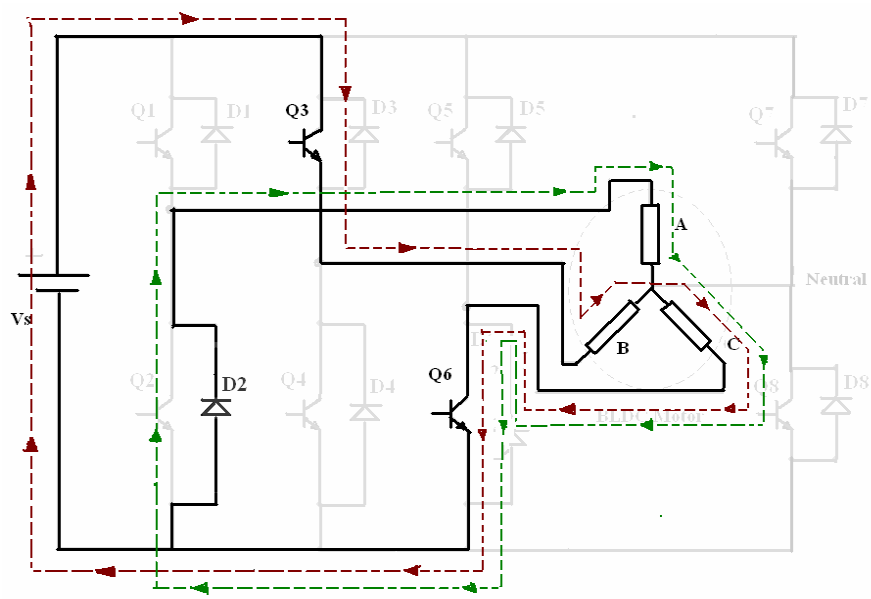

Figure-3. Free-wheeling of positive conducting A phase.

3. MATHEMATICAL MODELLING

Modeling of a BLDC motor can be developed in the similar manner as a three phase synchronous machine. Since its rotor is mounted with a permanent magnet, some dynamic characteristics are different. Flux linkage from the rotor is dependent upon the magnet. Therefore, saturation of magnetic flux linkage is typical for this kind of motors. As any typical three phase motors, one structure of the BLDC motor is fed by a three phase voltage source as shown in Figure-4. The source is not necessary to be sinusoidal. Square wave or other wave- shape can be applied as long as the peak voltage is not exceeded the maximum voltage limit of the motor. Similarly, the model of the armature winding for the BLDC motor is expressed as follows.

$$v_a = Ri_a + L\frac{di_a}{dt} + e_a$$

$$v_b = Ri_b + L\frac{di_b}{dt} + e_b$$

$$v_c = Ri_c + L\frac{di_c}{dt} + e_c$$

Or in the compact matrix form as follows.

$$\begin{bmatrix} v_a \\ v_b \\ v_c \end{bmatrix} = \begin{bmatrix} R+pL & 0 & 0 \\ 0 & R+pL & 0 \\ 0 & 0 & R+pL \end{bmatrix} \begin{bmatrix} i_a \\ i_b \\ i_c \end{bmatrix} + \begin{bmatrix} e_a \\ e_b \\ e_c \end{bmatrix}$$

Where $L_a = L_b = L_c = L = L_s - M$ H

L_s = armature of self inductance

M = mutual inductance

$R_a = R_b = R_c = R$ = armature resistance in ohm

v_a, v_b, v_c = terminal phase voltage in volts

i_a, i_b, i_c = motor input current in amperes

e_a, e_b, e_c = motor back emf in volts

P in the matrix represents $\frac{d}{dt}$

Due to the permanent magnet mounted on the rotor, its back emf is trapezoidal as shown in Figure-2. The expression of back emf must be modified as expressed in

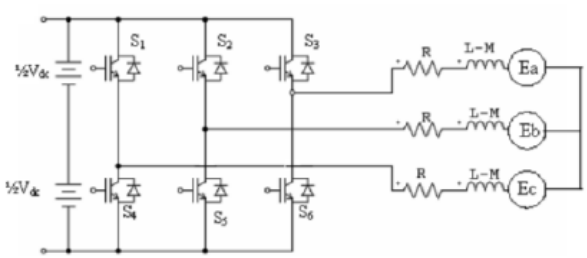

Figure-4. BLDC motor control system.

$$e_a(t) = K_E * \phi(\theta) * \omega(t)$$

$$e_b(t) = K_E * \phi\left(\theta - \frac{2\pi}{3}\right) * \omega(t)$$

$$e_c(t) = K_E * \phi\left(\theta + \frac{2\pi}{3}\right) * \omega(t)$$

Where K_E is the back emf constant and ω is the mechanical speed of the rotor. In above equation KE is e is capital letter or small letter because we used small letter in the above equation.

ARPN Journal of Engineering and Applied Sciences
©2006-2012 Asian Research Publishing Network (ARPN). All rights reserved.
www.arpnjournals.com

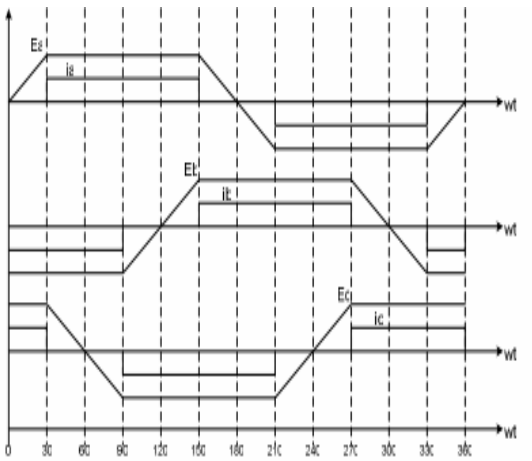

Figure-5. BLDC Motor back emf and the motor phase currents.

The permanent magnet also influences produced torques due to the trapezoidal flux linkage. Given that KT is the torque constant. The produced torques:

$$T_E = (e_a i_a + e_b i_b + e_c i_c)/\omega$$

The resultant torque, T_E, can be obtained by the following expressions.

$$T_a(t) = K_T * \phi(\theta) * i_a(t)$$

$$T_b(t) = K_T * \emptyset\left(\theta - \frac{2\pi}{3}\right) * i_b(t)$$

$$T_c(t) = K_T * \emptyset\left(\theta + \frac{2\pi}{3}\right) * i_c(t)$$

$$T_E(t) = T_a(t) + T_b(t) + T_c(t)$$

With the Newton's second law of motion, the angular motion of the rotor can be written as follows:

$$T_E(t) - T_L(t) = J\frac{d\omega(t)}{dt} + B * \omega(t)$$

Where

T_L load torque is in N-m
J rotor inertia in [kgm^2]
B damping constant

4. SIMULATION RESULTS

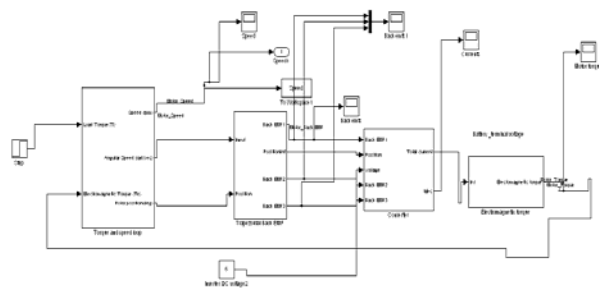

Figure-6. SIMULINK model of BLDC motor.

Figure-6 shows the Maltlab/Simulink model of BLDC motor with closed loop control. This Model consists of four sub blocks named as torque - speed block, back emf block, converter block and torque block.

Figure-7 shows the MATLAB model of the Torque speed loop in the BLDC motor circuit. The input of the block is load torque and electromagnetic torque. The output of the block is the rotor angle and angular speed.

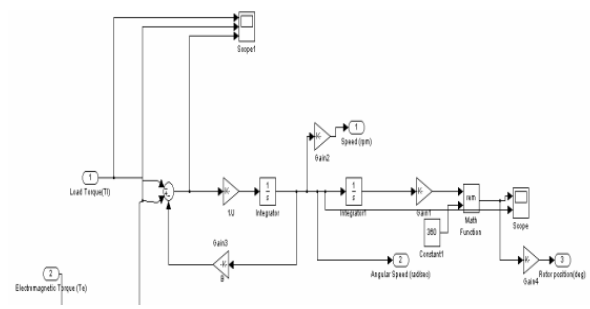

Figure-7. SIMULINK model of the torque speed loop.

Figure-8 shows the Trapezoidal back emf block of the BLDC motor. The input of this block is angular speed and rotor angle output is back emf.

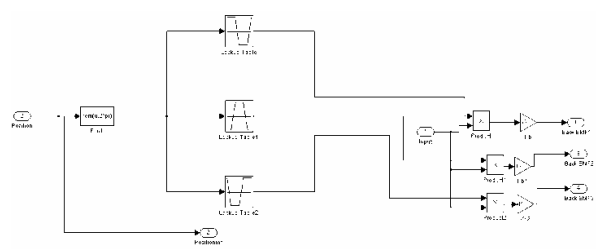

Figure-8. SIMULINK model for trapezoidal back emf loop of the BLDC motor.

The below figure shows the MATLAB circuit of the converter block in the BLDC motor.

©2006-2012 Asian Research Publishing Network (ARPN). All rights reserved.

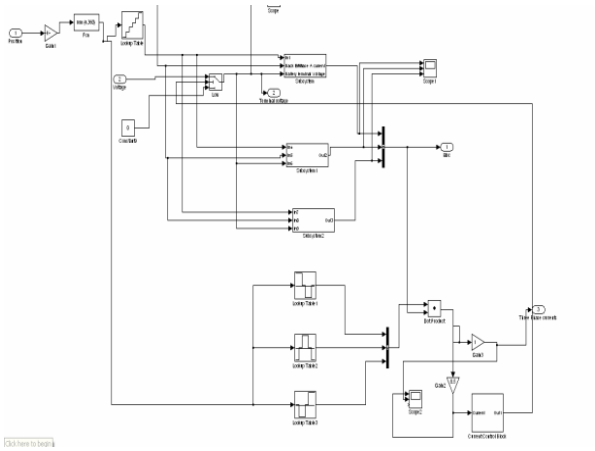

Figure-9. SIMULINK model of the converter block.

The inputs of the converter block is speed, rotor position, back emfs and voltage, the output of the block is current. Here simulation is carried out for four cases. In case 1 BLDC with open loop control, Case 2 BLDC with Closed loop PID Control on No Load, Case 3 BLDC with Closed loop PID Control on Increasing Load, Case 4 BLDC with Closed loop PID Control on Decreasing Load.

A. Case-1: BLDC with open loop control

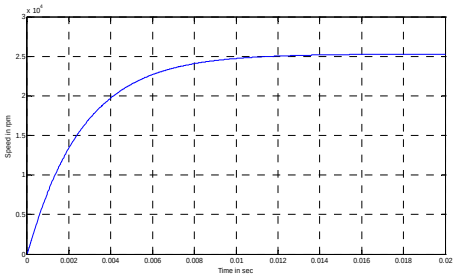

Figure-10. Output waveforms of the speed of the motor.

Figure-10 shows the no load speed of the motor with open loop control. At no load with open loop control motor is achieving a speed of 20000 RPM.

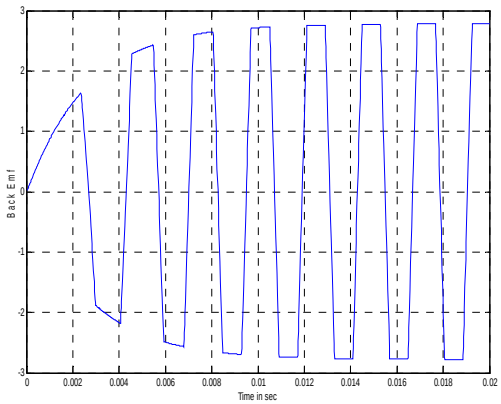

Figure-11. Back EMF of the BLDC motor.

Figure-11 shows the trapezoidal back emf wave form. Here we have considered 120 degree mode of operation.

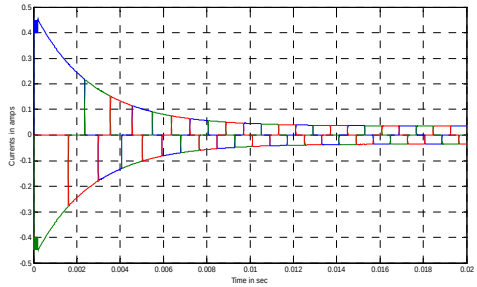

Figure-12. Output waveforms of the currents.

Figure-12 shows the three phase currents of motor. Initially current is high, once the speed reaches steady value current will decreases.

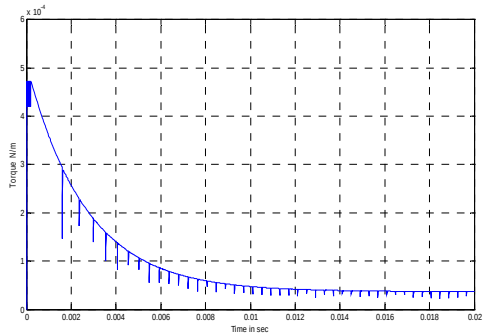

Figure-13. Output waveform of the torque of the motor.

Figure-13 shows the electromagnetic torque generated by the motor. Initially torque is high, once the speed reaches steady value torque will decreases.

B. Case-2: BLDC with closed loop PID control on no load

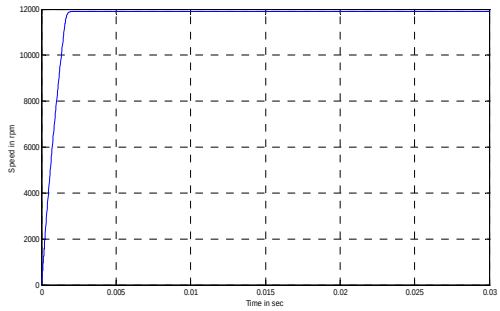

Figure-14. Output waveforms of the speed of the motor.

Figure-14 shows the no load speed of the motor with PID control. Here reference speed is taken as 12000 rpm the motor reaches the reference speed very quickly with PID control.

©2006-2012 Asian Research Publishing Network (ARPN). All rights reserved.

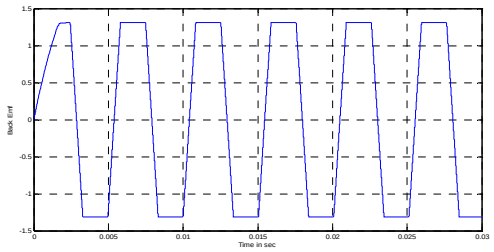

Figure-15. Back EMF of the BLDC motor

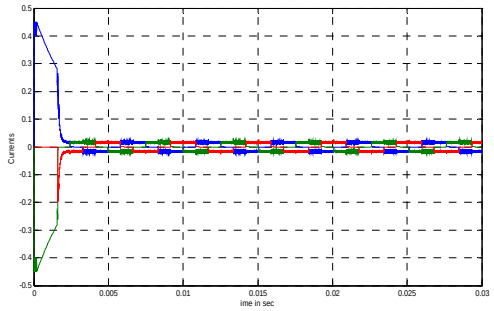

Figure-16. Output waveforms of the currents.

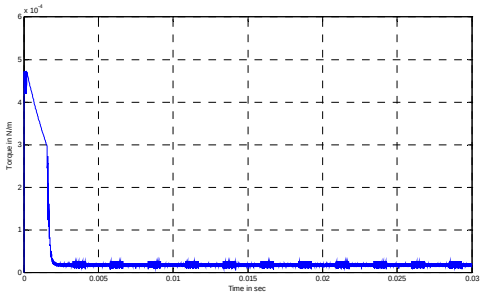

Figure-17. Output waveform of the torque of the motor

Figure-17 shows the electromagnetic torque generated by the motor. Initially torque is high, once the speed reaches steady value torque will decreases since it is no load case so torque is zero.

C. Case-3: BLDC with closed loop PID control for increasing load

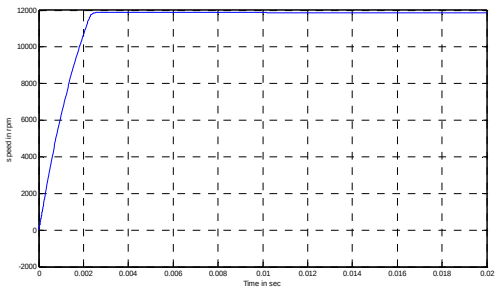

Figure-18. Output waveforms of the speed of the motor.

Figure-18 shows the speed of the motor with PID control. Here reference speed is taken as 12000 rpm the motor reaches the reference speed very quickly with PID control. Here load torque is increasing from 0.1 to 0.2 N-m at time t = 0.01 sec. At this time there is a small decrease in the speed of the motor.

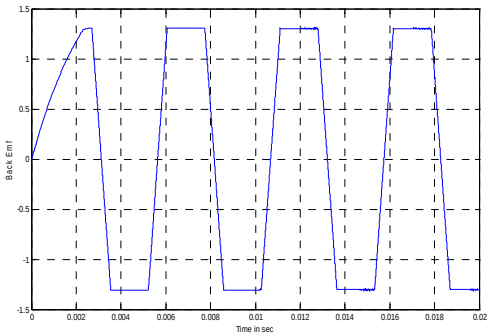

Figure-19. Back EMF of the BLDC motor

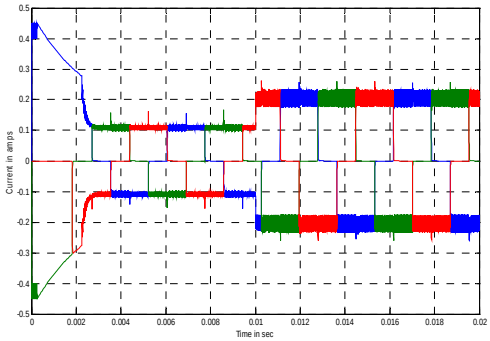

Figure-20. Output waveforms of the currents.

Figure-20 shows the three phase currents of motor. Initially current is high, once the speed reaches steady value current will decreases to rated value. At t = 0.01 sec load torque is increased to double the value so current also increase by same percentage.

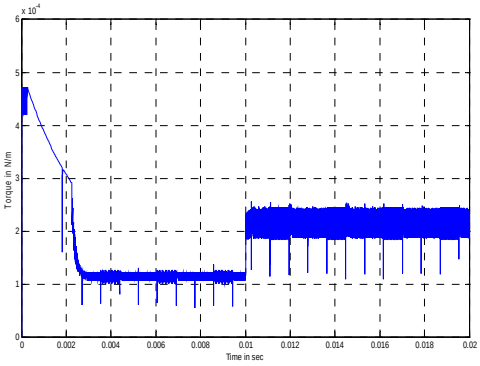

Figure-21. Output waveform of the torque of the motor.

©2006-2012 Asian Research Publishing Network (ARPN). All rights reserved.

Figure-21 shows the electromagnetic torque generated by the motor. Initially torque is high, once the speed reaches steady value torque will decreases to rated value. At t = 0.01 sec load torque is increased to double the value so Electromagnetic torque also increase by same percentage.

D. Case-4: BLDC with closed loop PID control for decreasing load

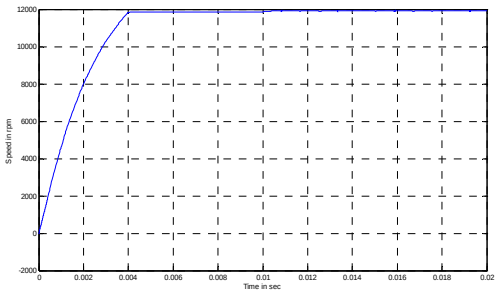

Figure-22. Output waveforms of the speed of the motor.

Figure-22 shows the speed of the motor with PID control. Here reference speed is taken as 12000 rpm the motor reaches the reference speed very quickly with PID control. Here load torque is decreasing from 0.2 to 0.1 N-m at time t = 0.01 sec. At this time there is a small increase in the speed of the motor.

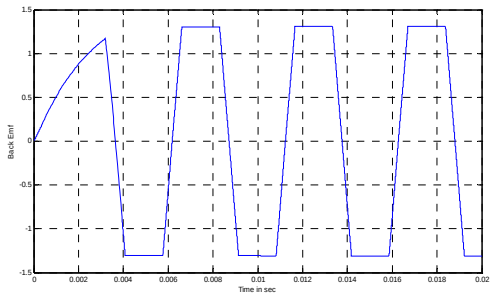

Figure-23. Back EMF of the BLDC motor.

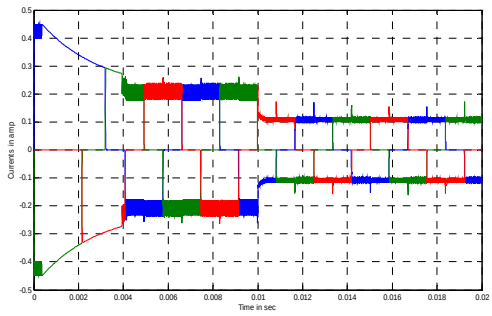

Figure-24. Output waveforms of the currents.

Figure-24 shows the three phase currents of motor. Initially current is high, once the speed reaches steady value current will decreases to rated value. At t = 0.01 sec load torque is decreased to half the value so current also decreased by same percentage.

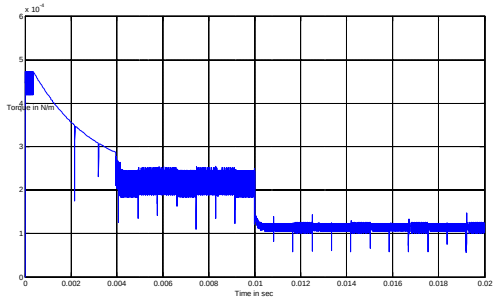

Figure-25. Output waveform of the torque of the motor.

Figure-25 shows the electromagnetic torque generated by the motor. Initially torque is high, once the speed reaches steady value torque will decreases to rated value. At t = 0.01 sec load torque is decreased to half the value so Electromagnetic torque also decreases by same percentage.

5. CONCLUSIONS

Permanent-magnet brushless dc motors is more accepted used in high-performance applications because of their higher efficiency, higher torque in low-speed range, high power density, low maintenance and less noise than other motors. In this paper BLDC motor mathematical model is developed. Finally closed loop speed control BLDC is carried out and simulation results are presented. The performance evaluation results show that this modeling is very useful in studying the high performance drive before taking up the dedicated controller design concept for evaluation of dynamic performance of the motor. Simulation results are shown for various loading conditions.

REFERENCES

[1] R. Civilian and D. Stupak. 1995. Disk drive employing multi mode spindle drive system. US patent 5471353, Oct 3.

[2] G.H. Jang and M.G. Kim. 2005. A Bipolar-Starting and Unipolar-Running Method to Drive an HDD Spindle Motor at High Speed with Large Starting Torque. IEEE Transactions on Magnetics. 41(2): 750-755, Feb.

[3] E. Grochowski and R.F. Hyot. 1996. Future trends in hard disk drives. IEEE Tran. On Magnetics. 32(3): 1850-1854, May.

[4] J.D. Ede, Z.Q. Zhu and D. Howe. 2001. Optimal split ratio control for high speed permanent magnet brushless DC motors. In: Proceeding of 5th

©2006-2012 Asian Research Publishing Network (ARPN). All rights reserved.

Internetaional Conference on Electrical Machines and Sytems. 2: 909-912.

[5] S.X. Chen, M.A. Jabbar, O.D. Zhang and Z.J. Lie. 1996. New Challenge: Electromagnetic design of BLDC motors for high speed fluid film bearing spindles used in hard disk drives. IEEE Trans. Magnetics. l32(5): 3854-3856, Sep.

[6] T. Kenzo and S. Nagamori. 1984. Permanent Magnets and Brushless DC Motors. Tokyo, Japan, Sogo Electronics.

[7] J.R. Hendershot and Miller. 1994. Design of Brushless Permanent Magnet Motors. Oxford Univ. Press.

[8] S.W. Cameron. 1995. Method and apparatus for starting a sensorless polyphase dc motors in dual coil mode and switching to single coil mode at speed. U.S. Patent 5455885, Nov.28.

[9] T. Gopalaratnam and H.A. Toliyat. 2003. A new topology for unipolar brushless dc motor drives. IEEE Trans. Power Electronics. 18(6): 1397-1404, Nov.

[10] Bhim Singh and Sanjeev Singh. 2009. State of art on permanent magnet brushless Dc motor Drives. Journal of Power Electronics. 9(1): 1-17 Jan.

[11] Maxon Precision Motors Inc. http://www.maxonmotor.com.

View publication stats